ecf

Marketplace

Marketplace

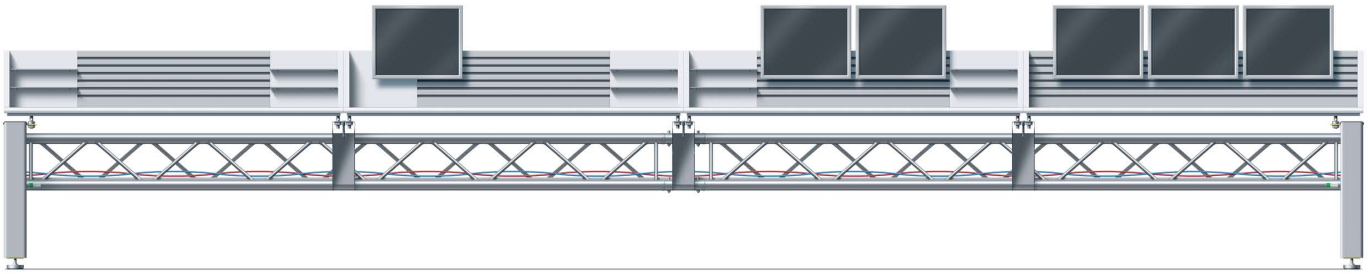

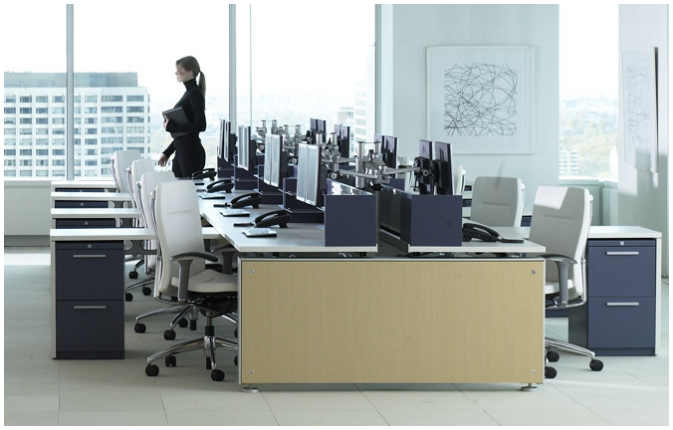

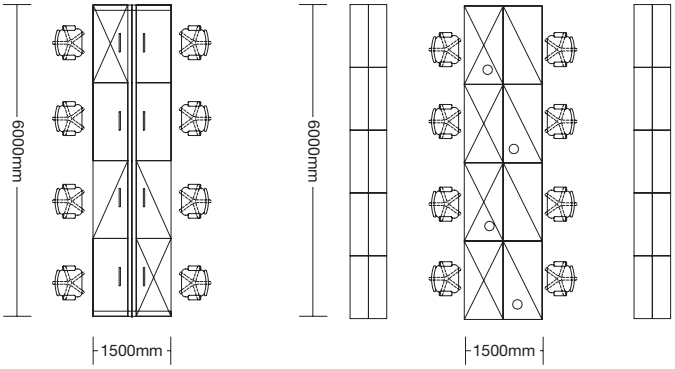

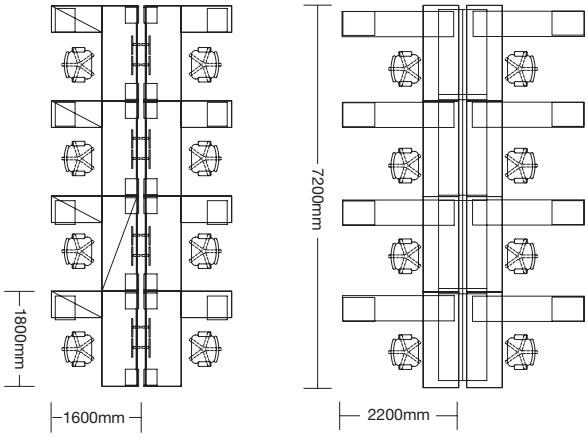

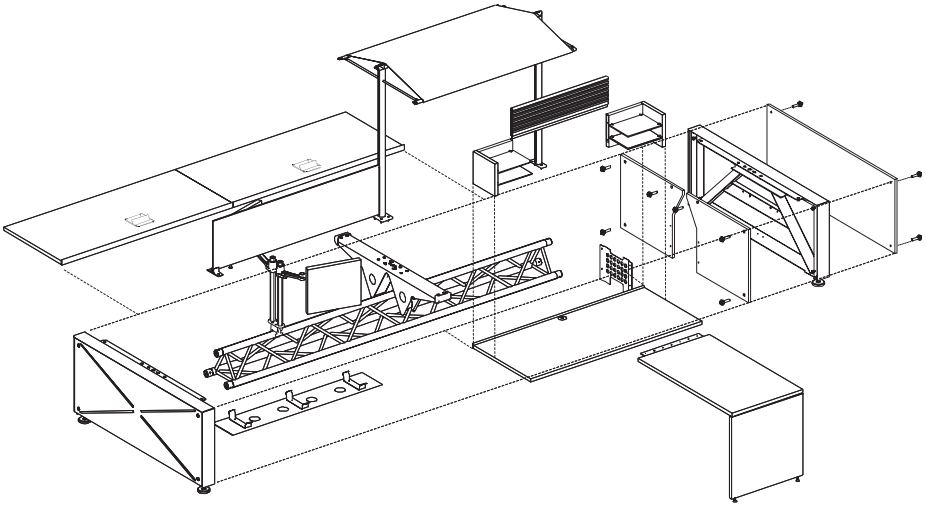

Teknion

Certified System Environment ISO 14001 SAI GLOBAL

Certified System Quality ISO 9001 SAI GLOBAL

EASTERN COMMERCIAL FURNITURE
1F MARINE PARADE ABBOTSFORD VICTORIA 3067 AUSTRALIA
T +61 (3) 9818 5444 F +61 (3) 9818 6655 E info@ecf.com.au W ecf.com.au

ecf